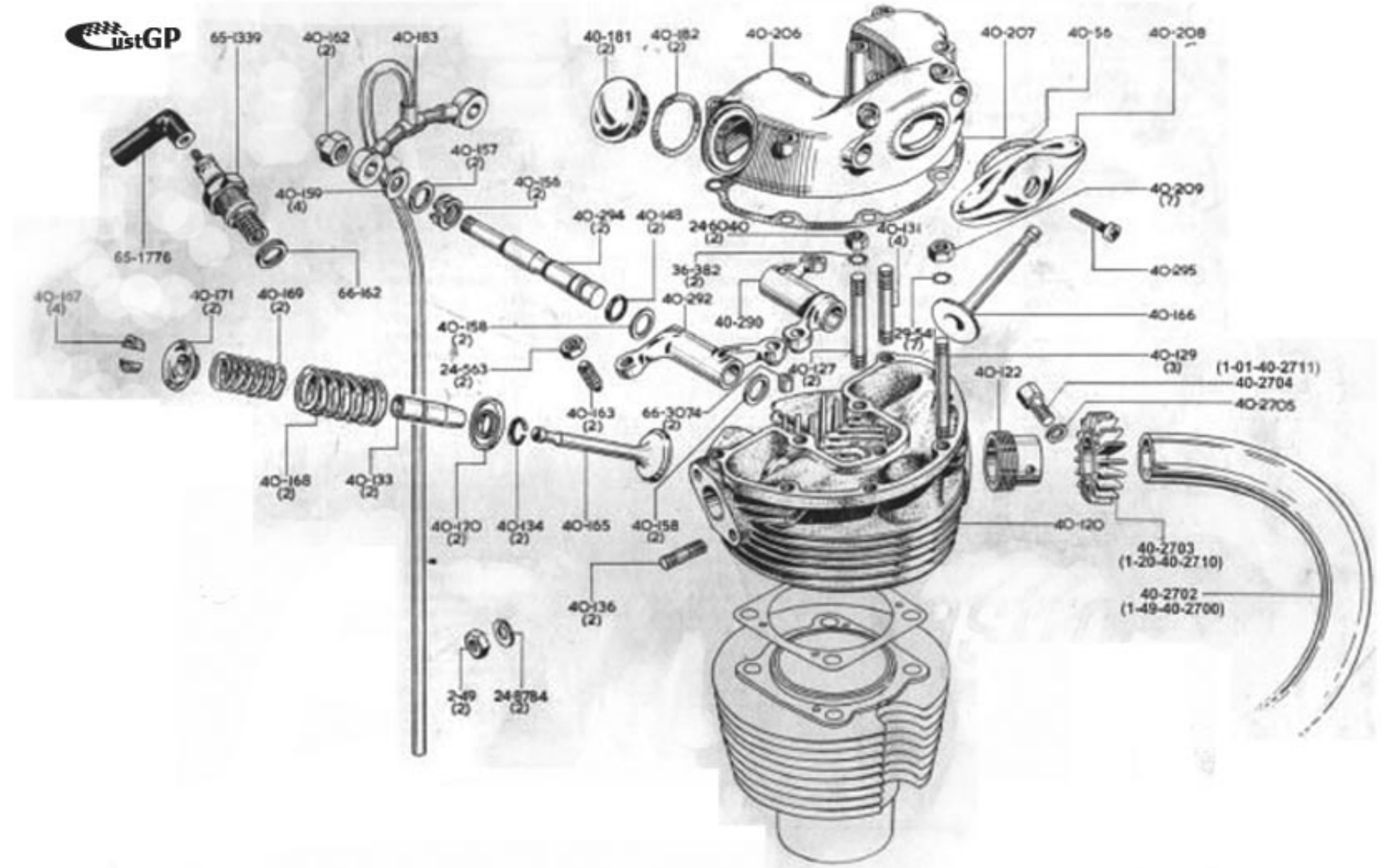
CustGP
65-1339
40-162 (2)
40-183
40-181 (2)
40-182 (2)
40-206
40-207
40-56
40-208
40-157 (2)
40-159 (4)
40-156 (2)
40-209 (7)
40-294 (2)
40-148 (2)
246040 (2)
40-131 (4)
65-1776
36-382 (2)
40-295
66-162
40-157 (4)
40-171 (2)
40-169 (2)
40-292
40-290
40-166
40-158 (2)
29-54 (7)
40-129 (3)
24-563 (2)
40-127 (2)
40-122
(1-01-40-2711)
40-2704
40-2705
40-163 (2)
66-3074 (2)
40-168 (2)
40-133 (2)
40-170 (2)
40-134 (2)
40-165
40-158 (2)
40-120
40-2703 (1-20-40-2710)
40-2702 (1-49-40-2700)
40-136 (2)
2-69 (2)
248784 (2)

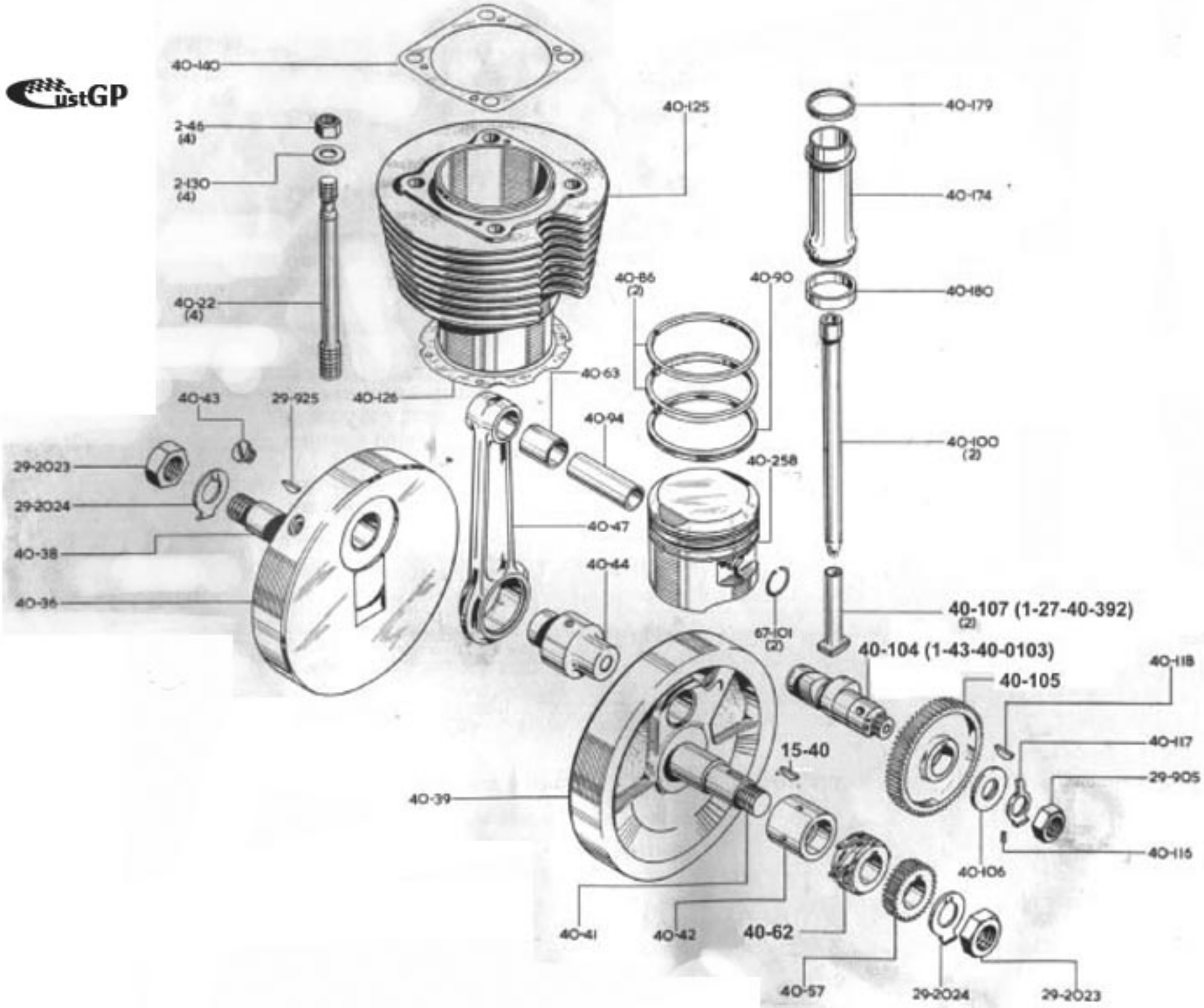
40-140
2-46 (4)
2-130 (4)
40-22 (4)
40-125
40-179
40-174
40-180
40-86 (2)
40-90
40-63
40-126
40-43
29-925
40-94
40-100 (2)
29-2023
29-2024
40-258
40-38
40-36
40-47
40-44
40-107 (1-27-40-392) (2)
67-101 (2)
40-104 (1-43-40-0103)
40-105
40-118
40-117
15-40
29-905
40-39
40-116
40-106
40-41
40-42
40-62
40-57
29-2024
29-2023

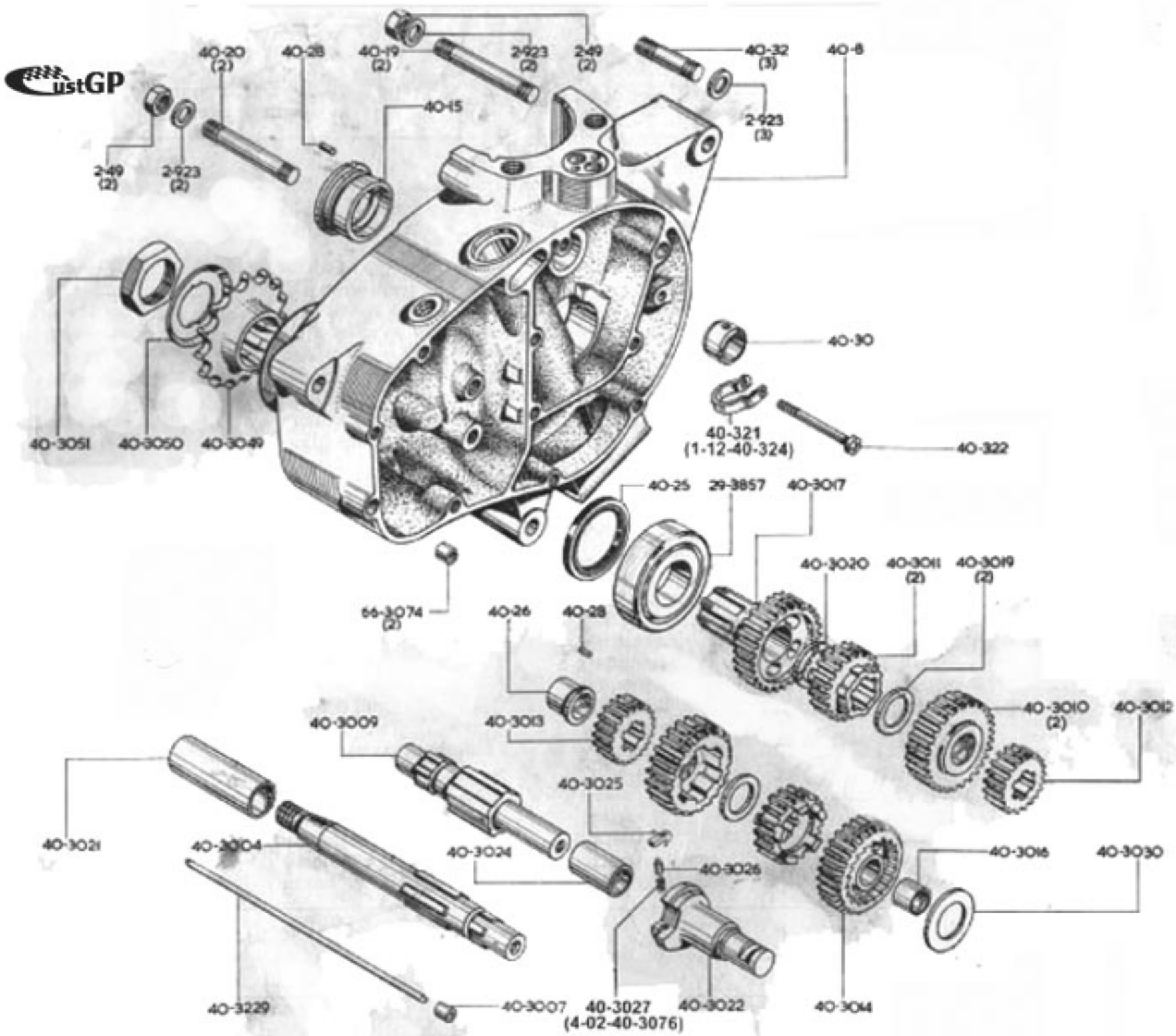
CustGP
40-20 (2)
40-28
40-19 (2)
2-923 (2)
2-49 (2)
40-32 (3)
40-8
2-923 (3)
40-15
2-49 (2)
2-923 (2)
40-30
40-3051
40-3050
40-3049
40-321 (1-12-40-324)
40-322
40-25
29-3857
40-3017
40-3020
40-3011 (2)
40-3019 (2)
66-3074 (2)
40-26
40-28
40-3010 (2)
40-3012
40-3009
40-3013
40-3025
40-3021
40-3004
40-3024
40-3026
40-3016
40-3030
40-3229
40-3007
40-3027 (4-02-40-3076)
40-3022
40-3014

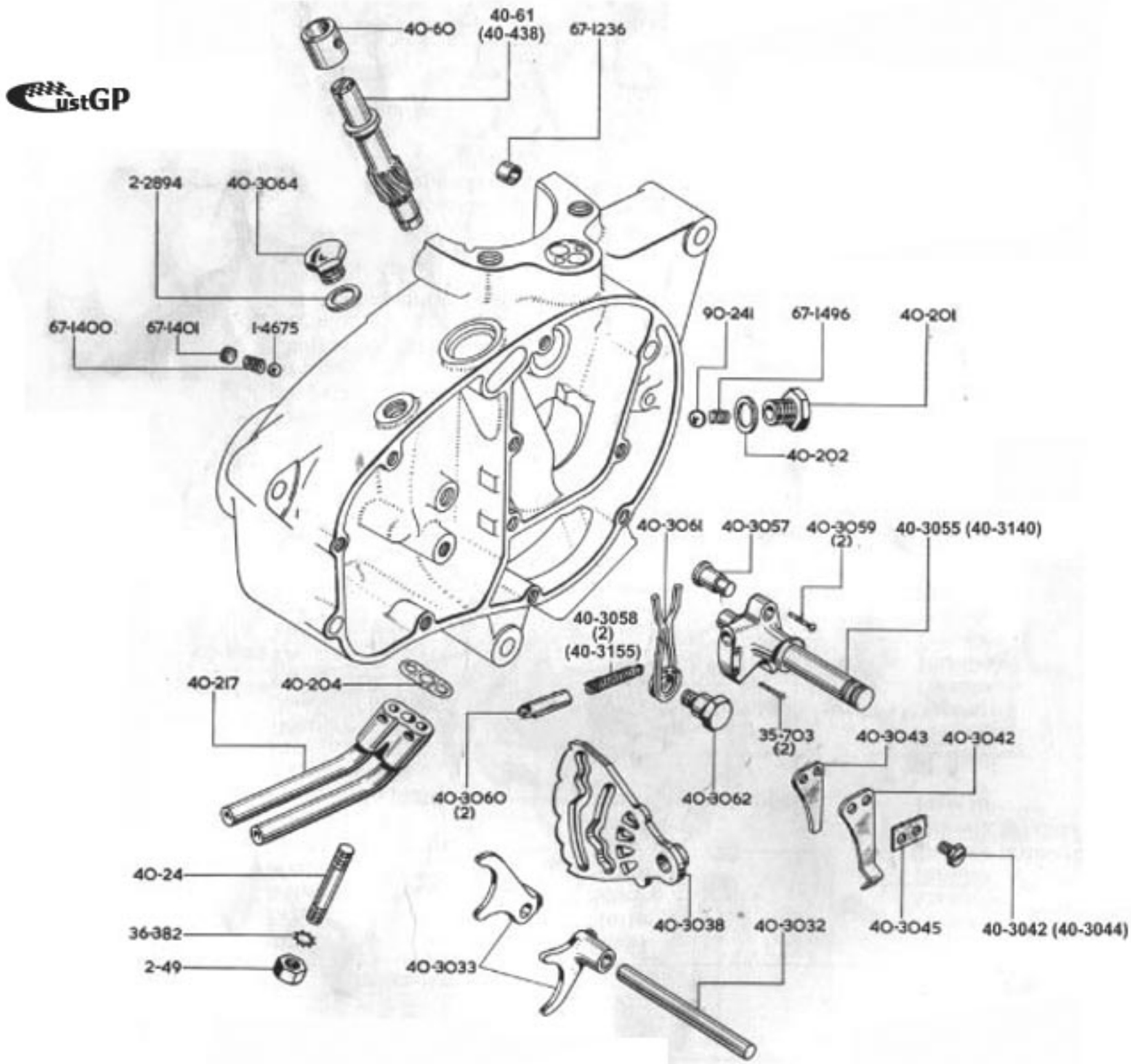
CustGP
40-60
40-61
(40-438)
67-1236
2-2894
40-3064
67-1400
67-1401
1-4675
90-241
67-1496
40-201
40-202
40-3061
40-3057
40-3059
(2)
40-3055 (40-3140)
40-3058
(2)
(40-3155)
40-217
40-204
35-703
(2)
40-3043
40-3042
40-3060
(2)
40-3062
40-24
36-382
2-49
40-3033
40-3038
40-3032
40-3045
40-3042 (40-3044)

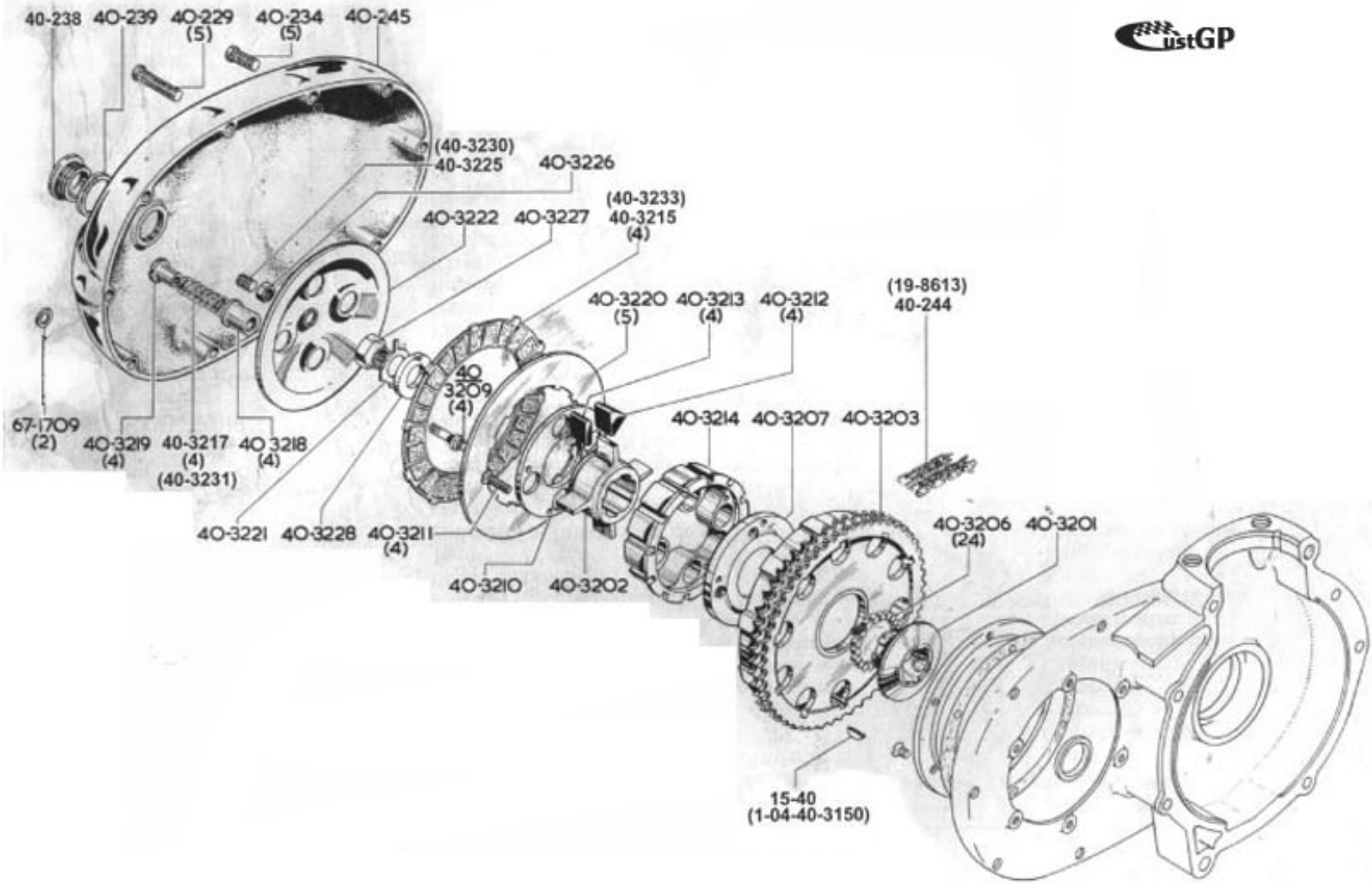
40-238
40-239
40-229 (5)
40-234 (5)
40-245
(40-3230) 40-3225
40-3226
40-3222
40-3227
(40-3233) 40-3215 (4)
40-3220 (5)
40-3213 (4)
40-3212 (4)
(19-8613) 40-244
40 3209 (4)
67-1709 (2)
40-3219 (4)
40-3217 (4) (40-3231)
40 3218 (4)
40-3214
40-3207
40-3203
40-3221
40-3228
40-3211 (4)
40-3210
40-3202
40-3206 (24)
40-3201
15-40 (1-04-40-3150)

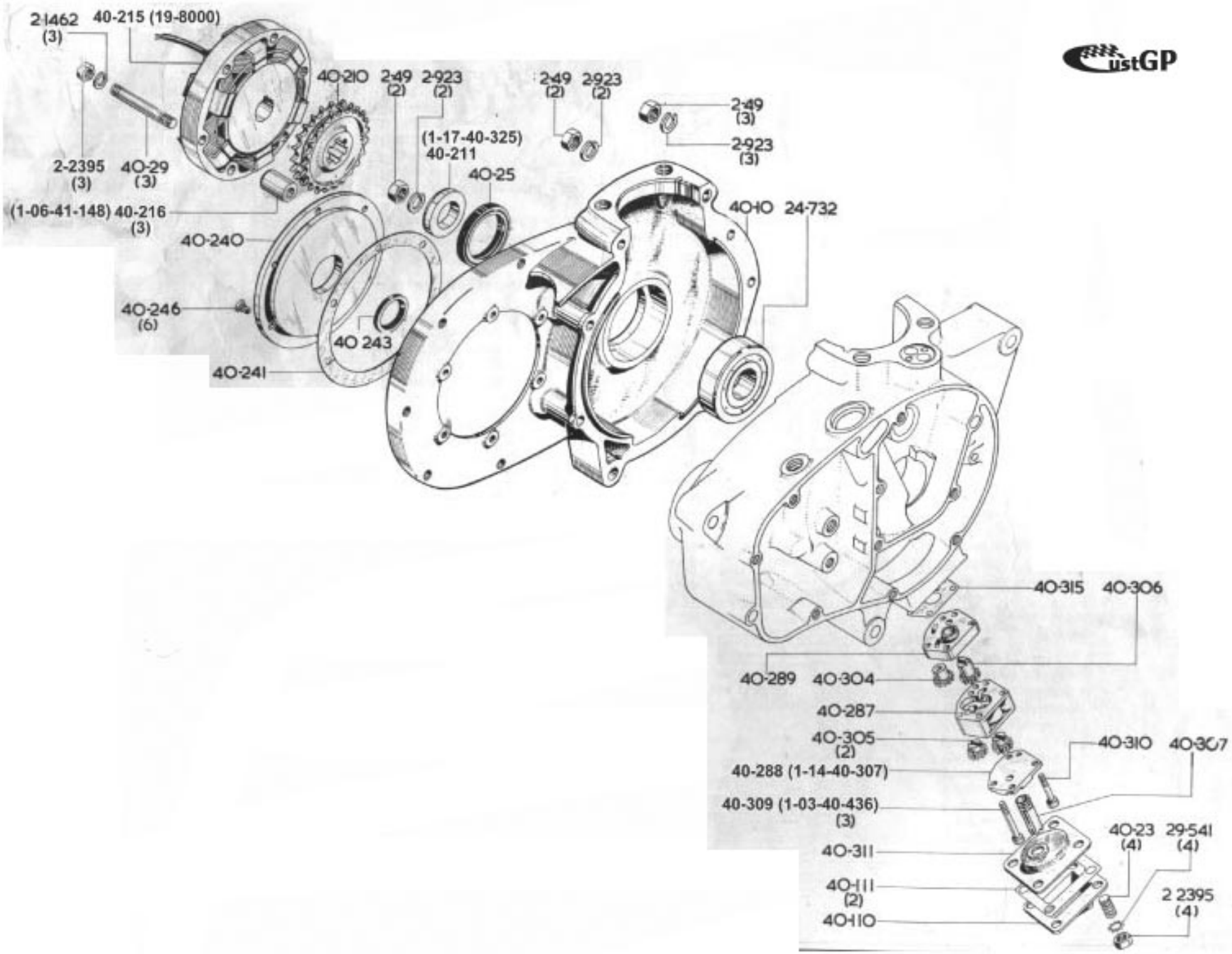
2-1462
(3)
40-215 (19-8000)
40-210
2-49
(2)
2-923
(2)
2-49
(2)
2-923
(2)
2-49
(3)
2-923
(3)
(1-17-40-325)
40-211
40-25
2-2395
(3)
40-29
(3)
(1-06-41-148) 40-216
(3)
40-240
40-10
24-732
40-246
(6)
40 243
40-241
40-315
40-306
40-289
40-304
40-287
40-305
(2)
40-310
40-307
40-288 (1-14-40-307)
40-309 (1-03-40-436)
(3)
40-23
(4)
29-541
(4)
40-311
40-111
(2)
2 2395
(4)
40-110

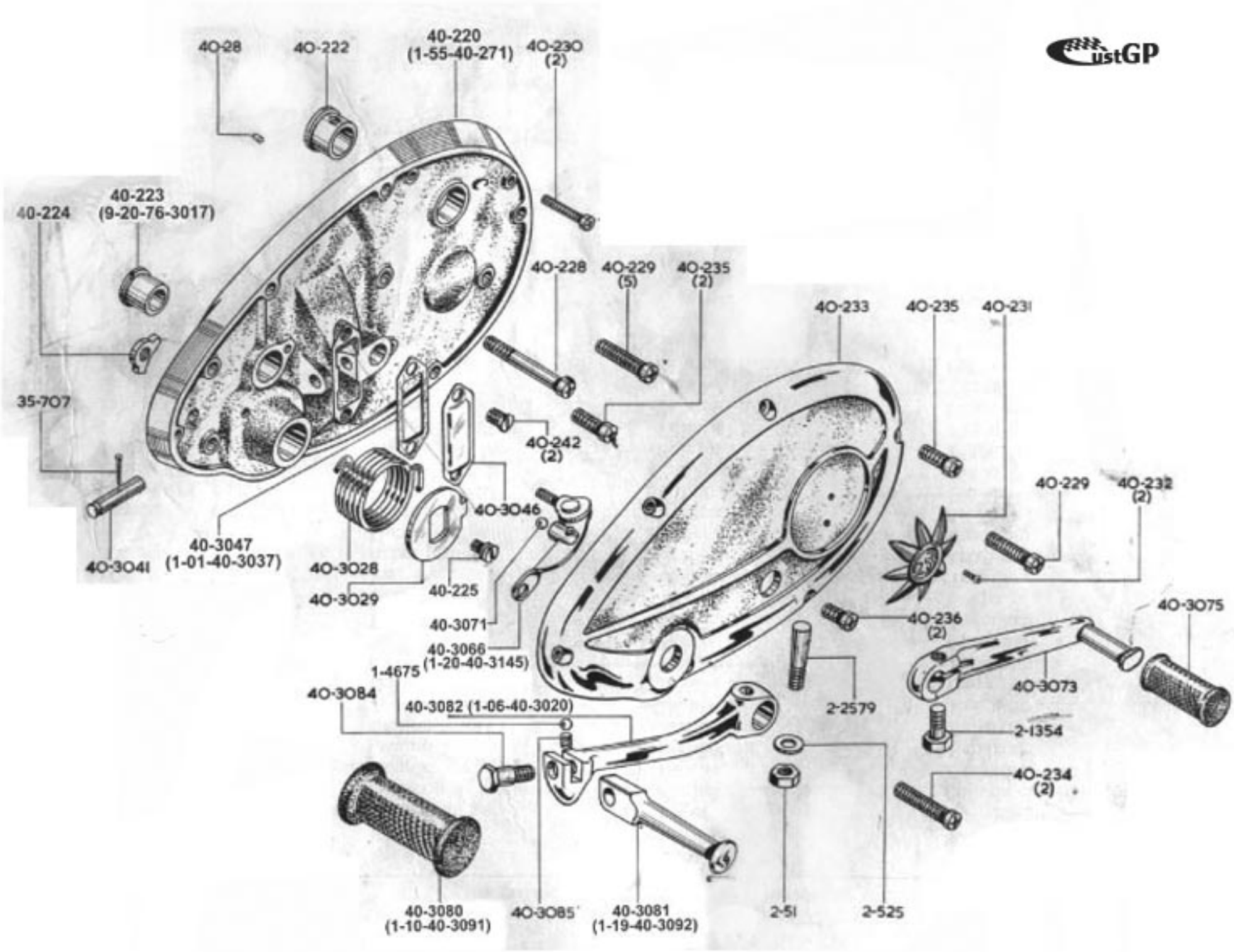
40-28
40-222
40-220
(1-55-40-271)
40-230
(2)
40-224
40-223
(9-20-76-3017)
40-228
40-229
(5)
40-235
(2)
40-233
40-235
40-231
35-707
40-242
(2)
40-229
40-232
(2)
40-3046
40-3041
40-3047
(1-01-40-3037)
40-3028
40-3029
40-225
40-3071
40-3066
(1-20-40-3145)
40-236
(2)
40-3075
1-4675
40-3084
40-3082 (1-06-40-3020)
2-2579
40-3073
2-1354
40-234
(2)
40-3080
(1-10-40-3091)
40-3085
40-3081
(1-19-40-3092)
2-51
2-525

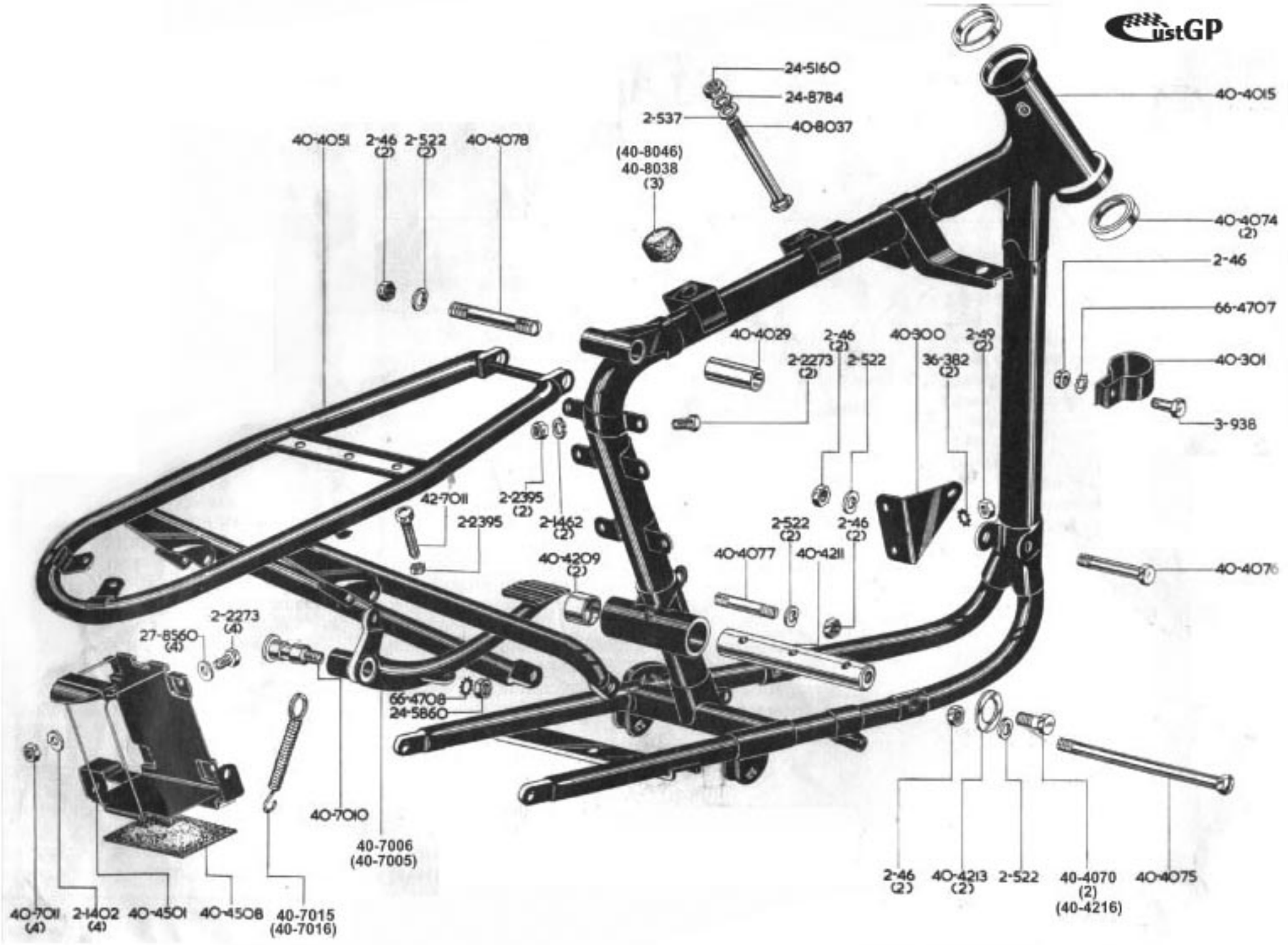
24-5160
24-8784
2-537
40-8037
40-4015
40-4051
2-46 (2)
2-522 (2)
40-4078
(40-8046)
40-8038
(3)
40-4074 (2)
2-46
66-4707
40-4029
2-46 (2)
40-300
2-49 (2)
2-2273 (2)
2-522
36-382 (2)
40-301
3-938
42-7011
2-2395 (2)
2-2395
2-1462 (2)
2-522 (2)
2-46 (2)
40-4077
40-4211
40-4209 (2)
40-4076
2-2273 (4)
27-8560 (4)
66-4708
24-5860
40-7010
40-7006
(40-7005)
2-46 (2)
40-4213 (2)
2-522
40-4070 (2)
(40-4216)
40-4075
40-7011 (4)
2-1402 (4)
40-4501
40-4508
40-7015
(40-7016)

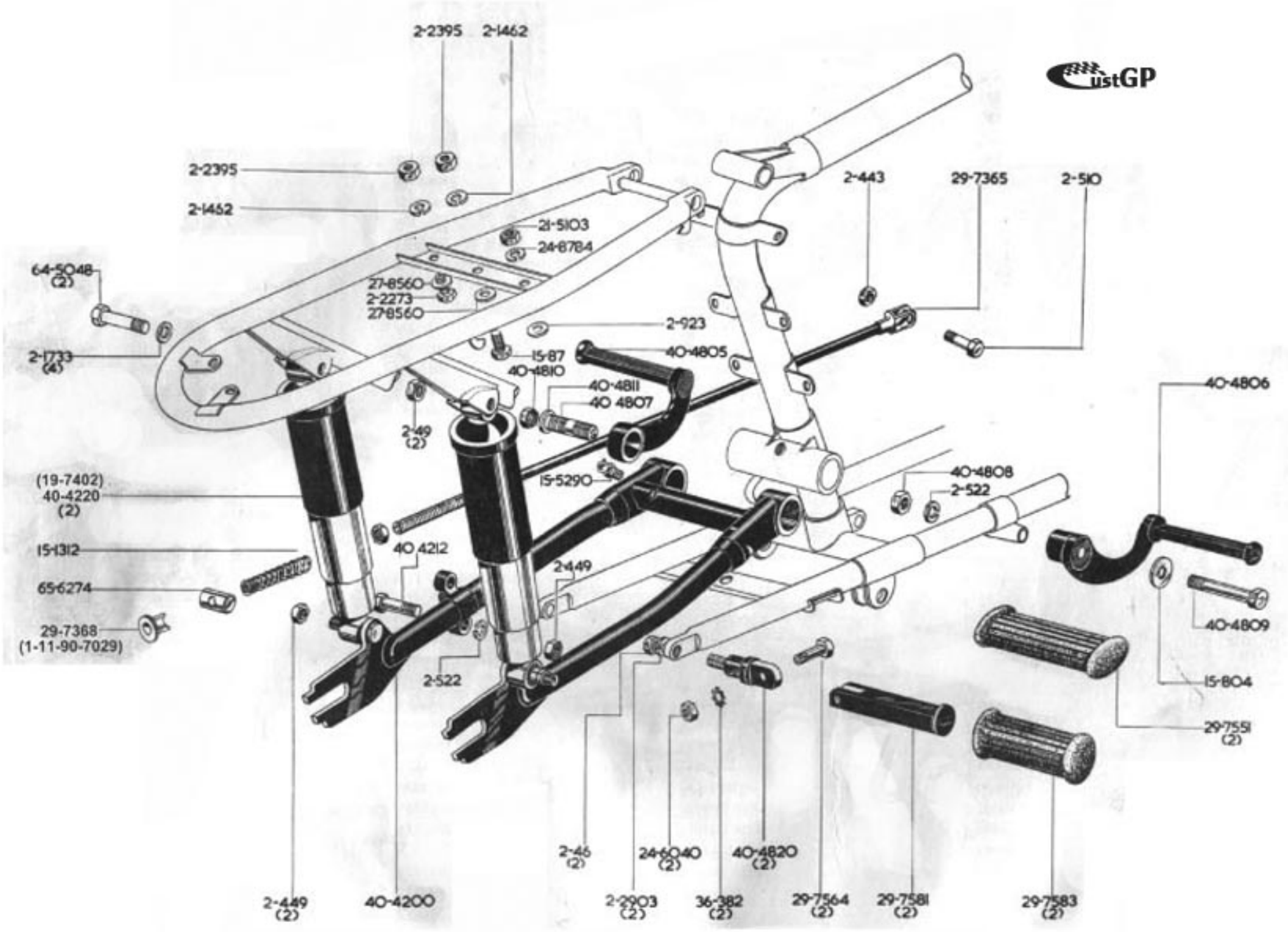
2-2395
2-1462
2-2395
2-1462
21-5103
24-6784
64-5048 (2)
27-8560
2-2273
27-8560
2-1733 (4)
2-923
15-87
40-4805
40-4810
40-4811
40 4807
2-49 (2)
(19-7402)
40-4220 (2)
15-5290
40-4808
2-522
15-1312
40 4212
2-449
65-6274
29-7368 (1-11-90-7029)
2-522
2-443
29-7365
2-510
40-4806
40-4809
15-804
29-7551 (2)
2-46 (2)
24-6040 (2)
40-4820 (2)
2-449 (2)
40-4200
2-2903 (2)
36-382 (2)
29-7564 (2)
29-7581 (2)
29-7583 (2)

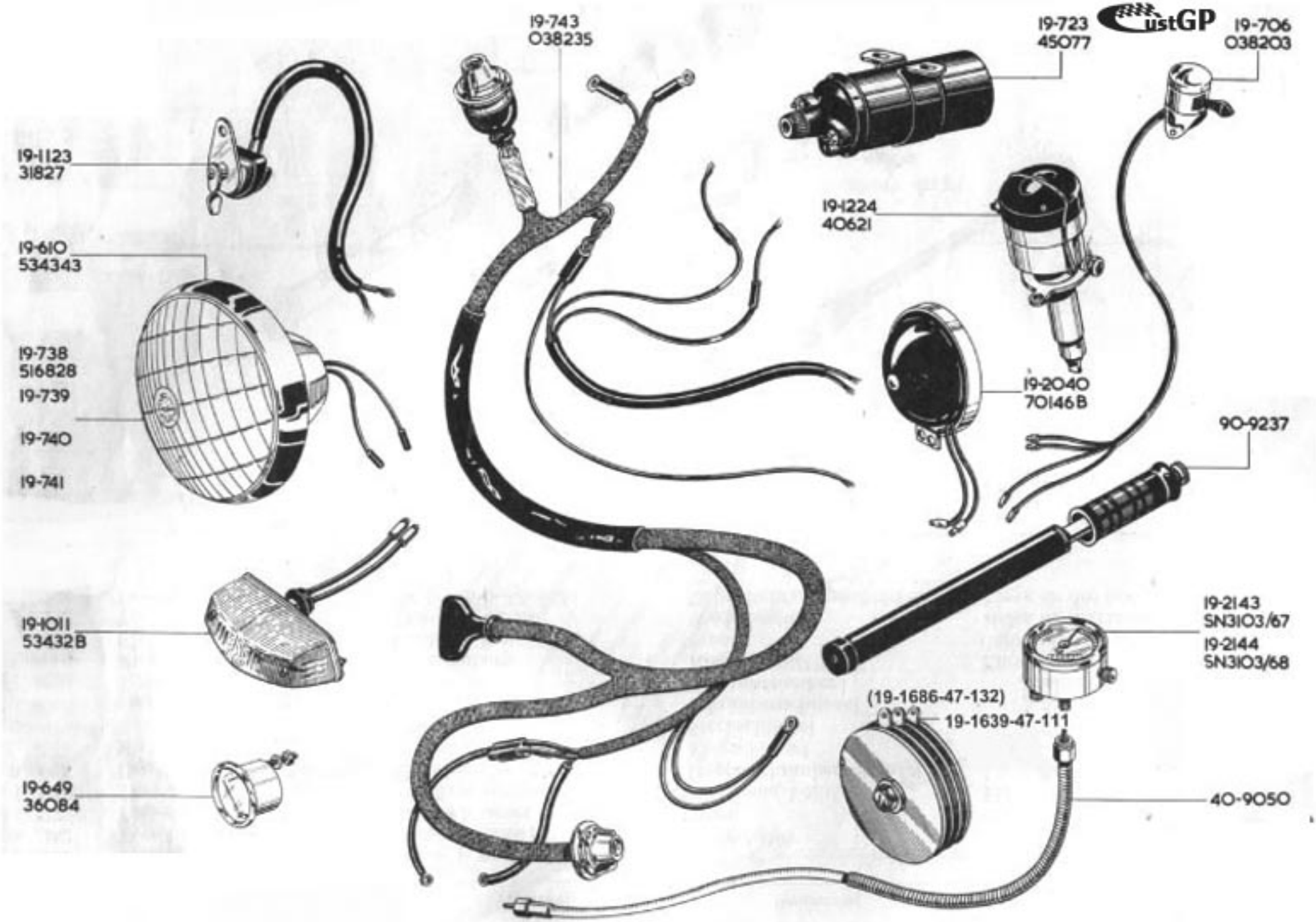
19-743
038235
19-723
45077
19-706
038203
19-1123
31827
19-1224
40621
19-610
534343
19-738
516828
19-739
19-740
19-741
19-2040
70146B
90-9237
19-1011
53432B
19-2143
SN3103/67
19-2144
SN3103/68
(19-1686-47-132)
19-1639-47-111
19-649
36084
40-9050

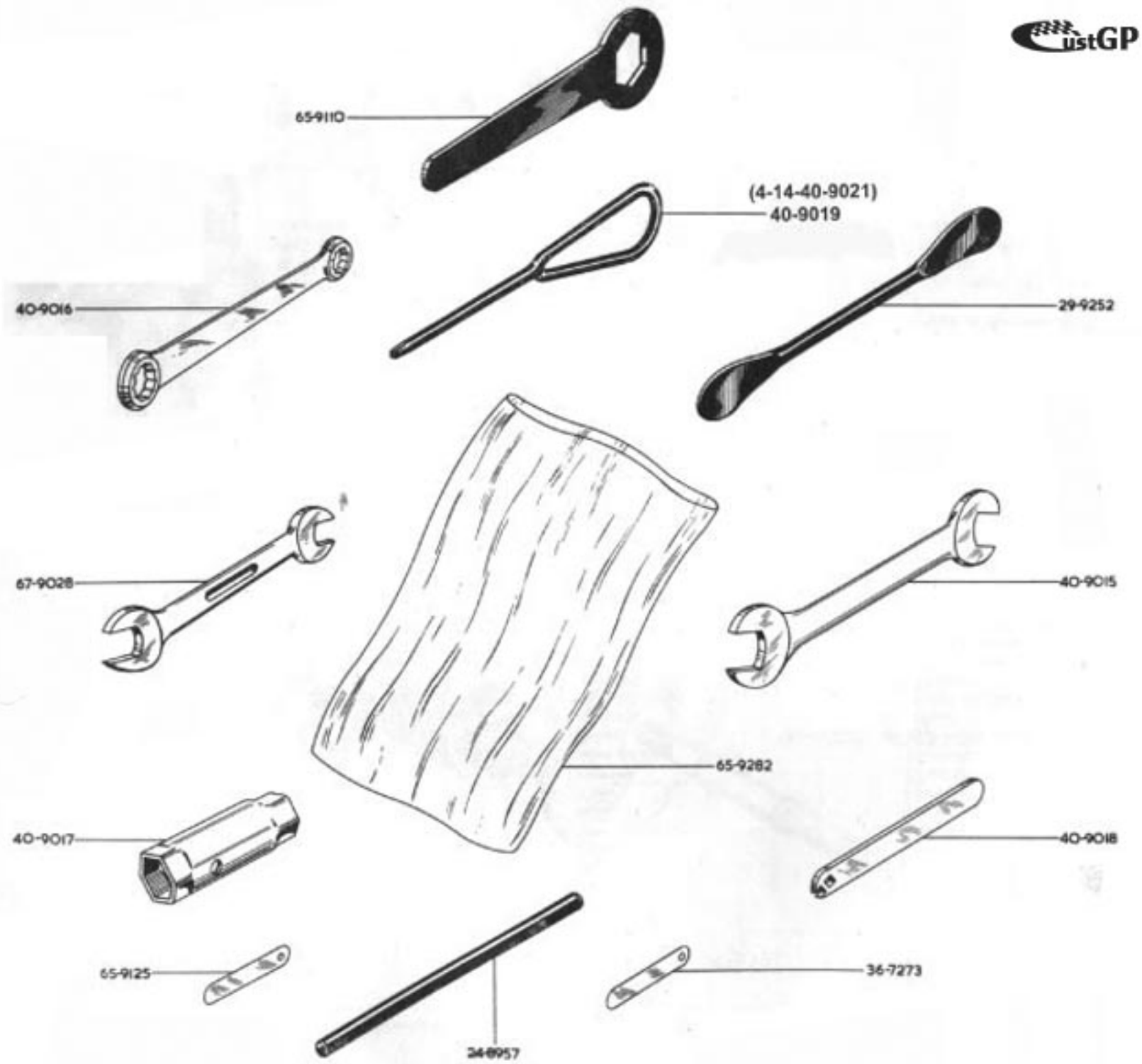
65-9110
(4-14-40-9021)
40-9019
40-9016
29-9252
67-9028
40-9015
65-9282
40-9017
40-9018
65-9125
36-7273
24-8957

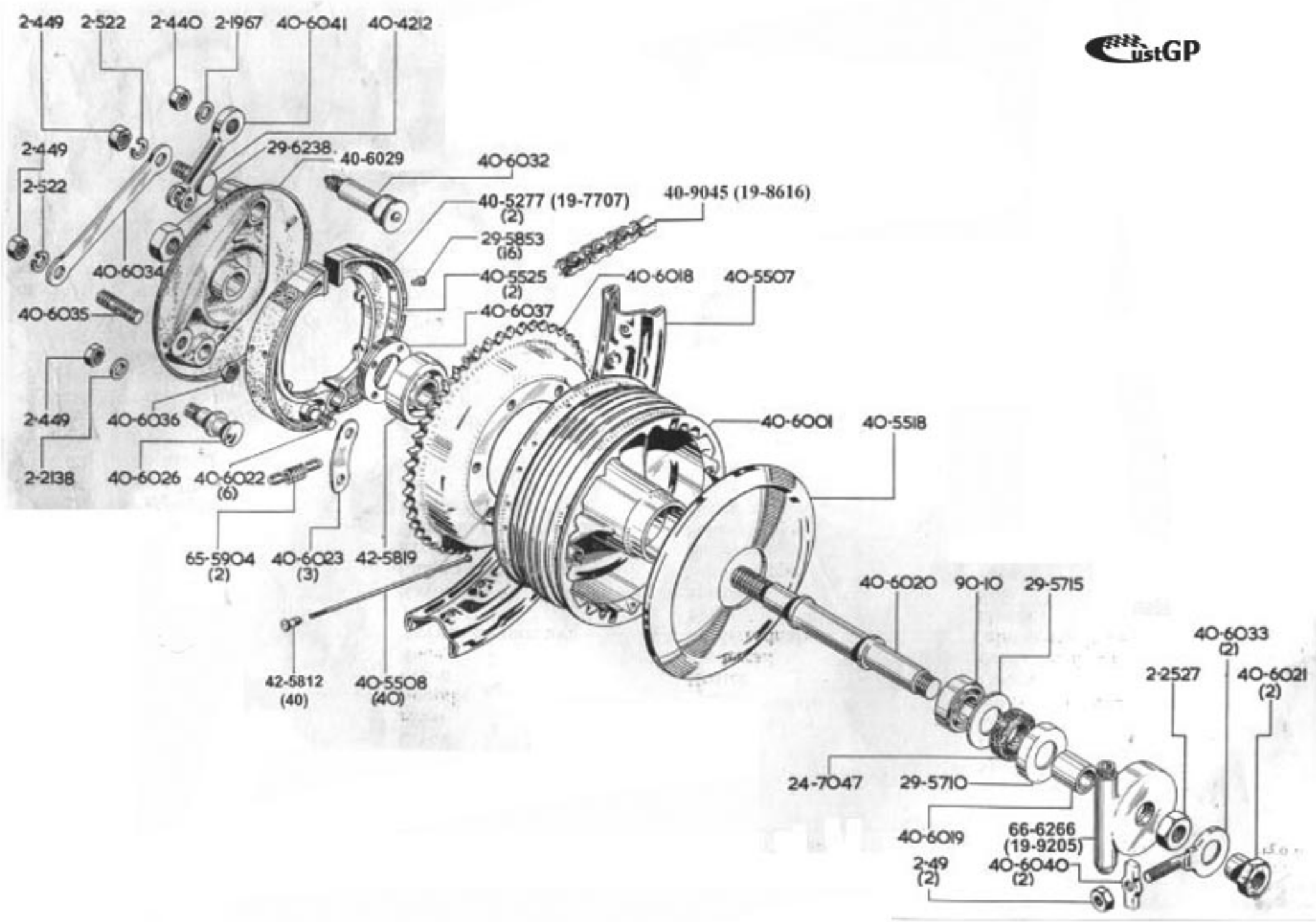
2-449
2-522
2-440
2-1967
40-6041
40-4212
2-449
2-522
29-6238
40-6029
40-6032
40-5277 (19-7707)
(2)
40-9045 (19-8616)
29-5853
(16)
40-6034
40-5525
(2)
40-6018
40-5507
40-6035
40-6037
2-449
40-6036
40-6001
40-5518
2-2138
40-6026
40-6022
(6)
65-5904
(2)
40-6023
(3)
42-5819
40-6020
90-10
29-5715
40-6033
(2)
2-2527
40-6021
(2)
42-5812
(40)
40-5508
(40)
24-7047
29-5710
40-6019
66-6266
(19-9205)
2-49
(2)
40-6040
(2)

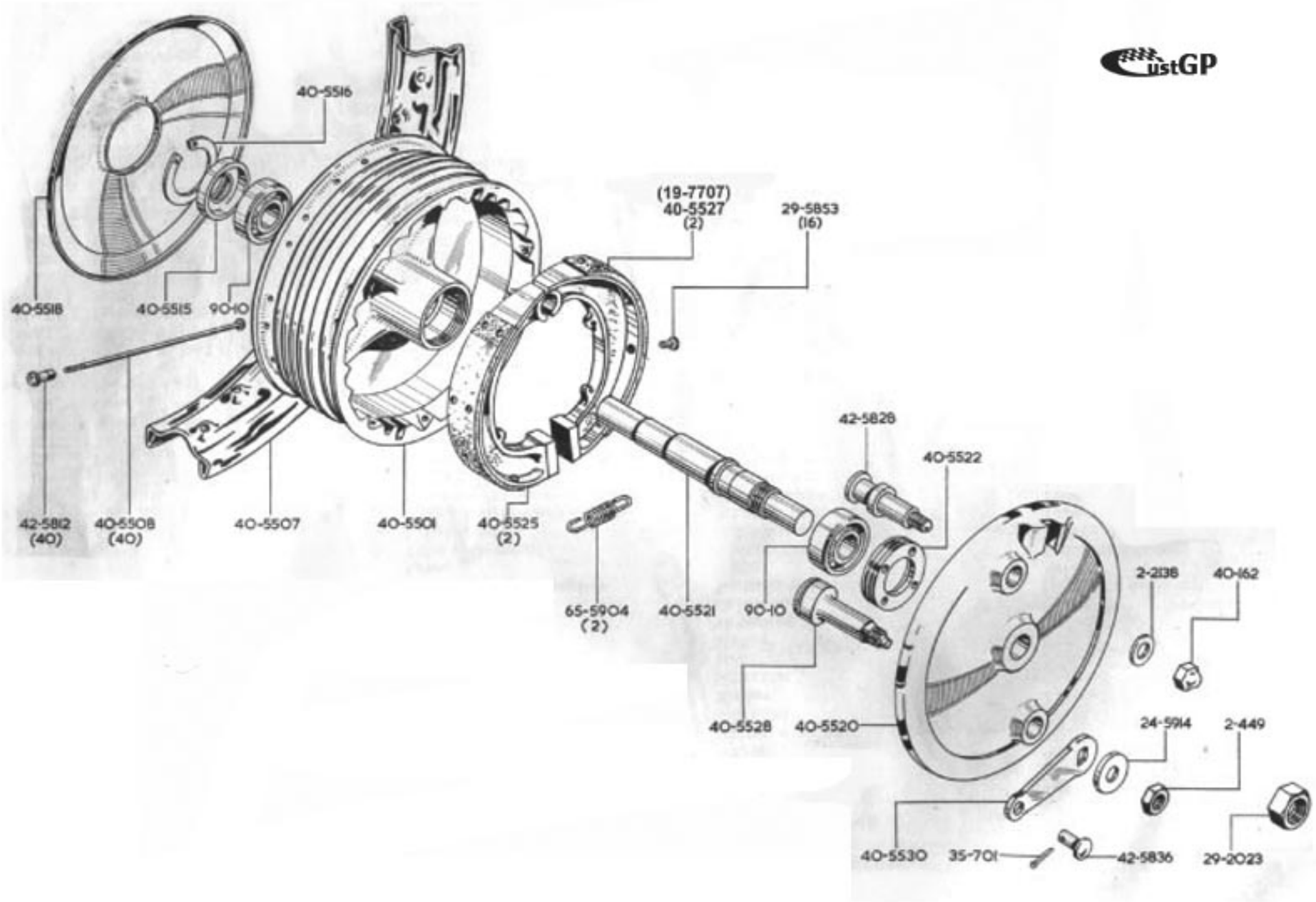
40-5516
40-5518
40-5515
90-10
42-5812
(40)
40-5508
(40)
40-5507
40-5501
40-5525
(2)
(19-7707)
40-5527
(2)
29-5853
(16)
65-5904
(2)
40-5521
42-5828
40-5522
90-10
40-5528
40-5520
2-2138
40-162
24-5914
2-449
40-5530
35-701
42-5836
29-2023

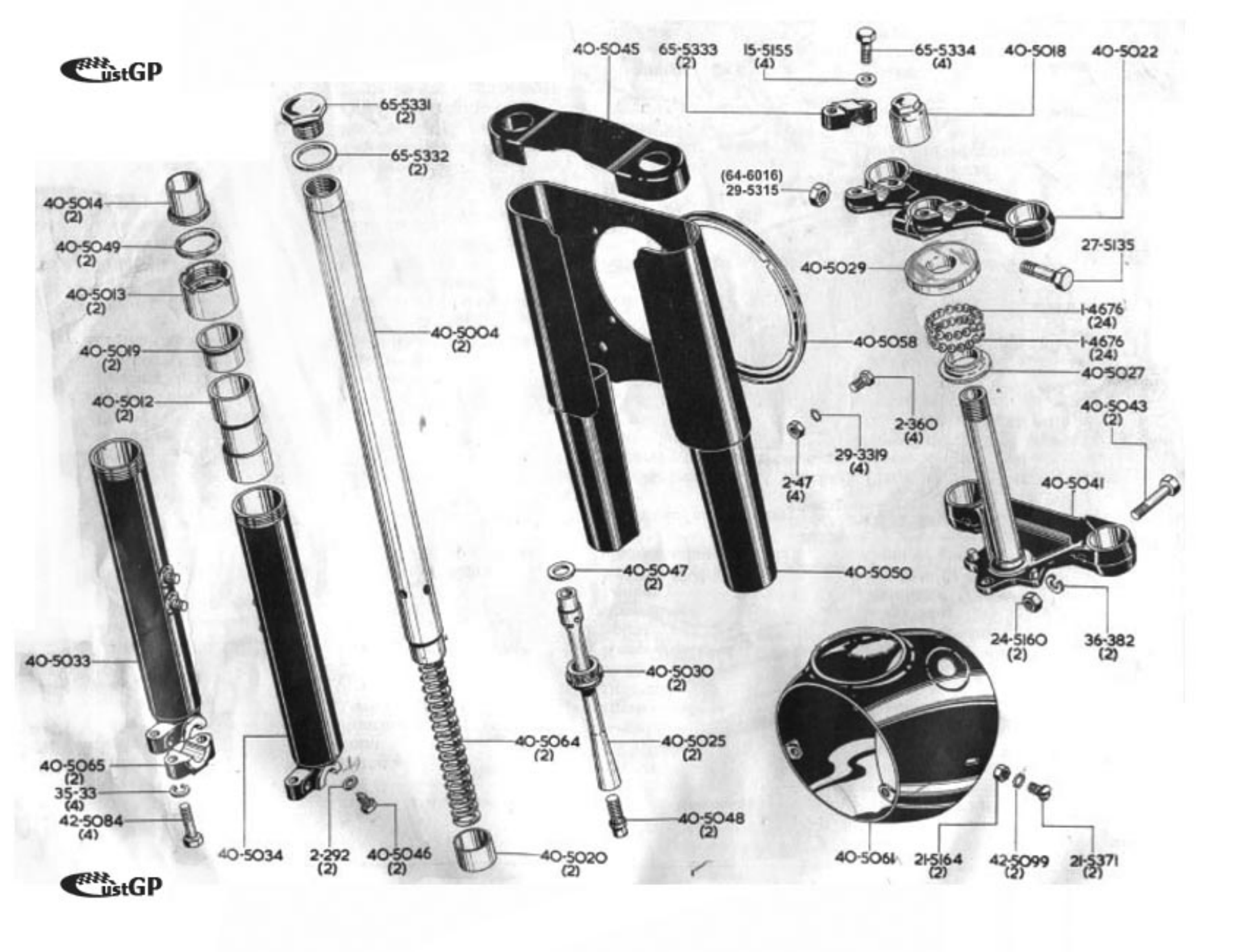
40-5045
65-5333 (2)
15-5155 (4)
65-5334 (4)
40-5018
40-5022
65-5331 (2)
65-5332 (2)
(64-6016) 29-5315
40-5014 (2)
40-5049 (2)
40-5013 (2)
40-5019 (2)
40-5012 (2)
40-5004 (2)
40-5029
27-5135
1-4676 (24)
40-5058
1-4676 (24)
40-5027
2-360 (4)
29-3319 (4)
2-47 (4)
40-5043 (2)
40-5041
40-5047 (2)
40-5050
24-5160 (2)
36-382 (2)
40-5033
40-5030 (2)
40-5064 (2)
40-5025 (2)
40-5065 (2)
35-33 (4)
42-5084 (4)
40-5048 (2)
40-5034
2-292 (2)
40-5046 (2)
40-5020 (2)
40-5061
21-5164 (2)
42-5099 (2)
21-5371 (2)

CustGP

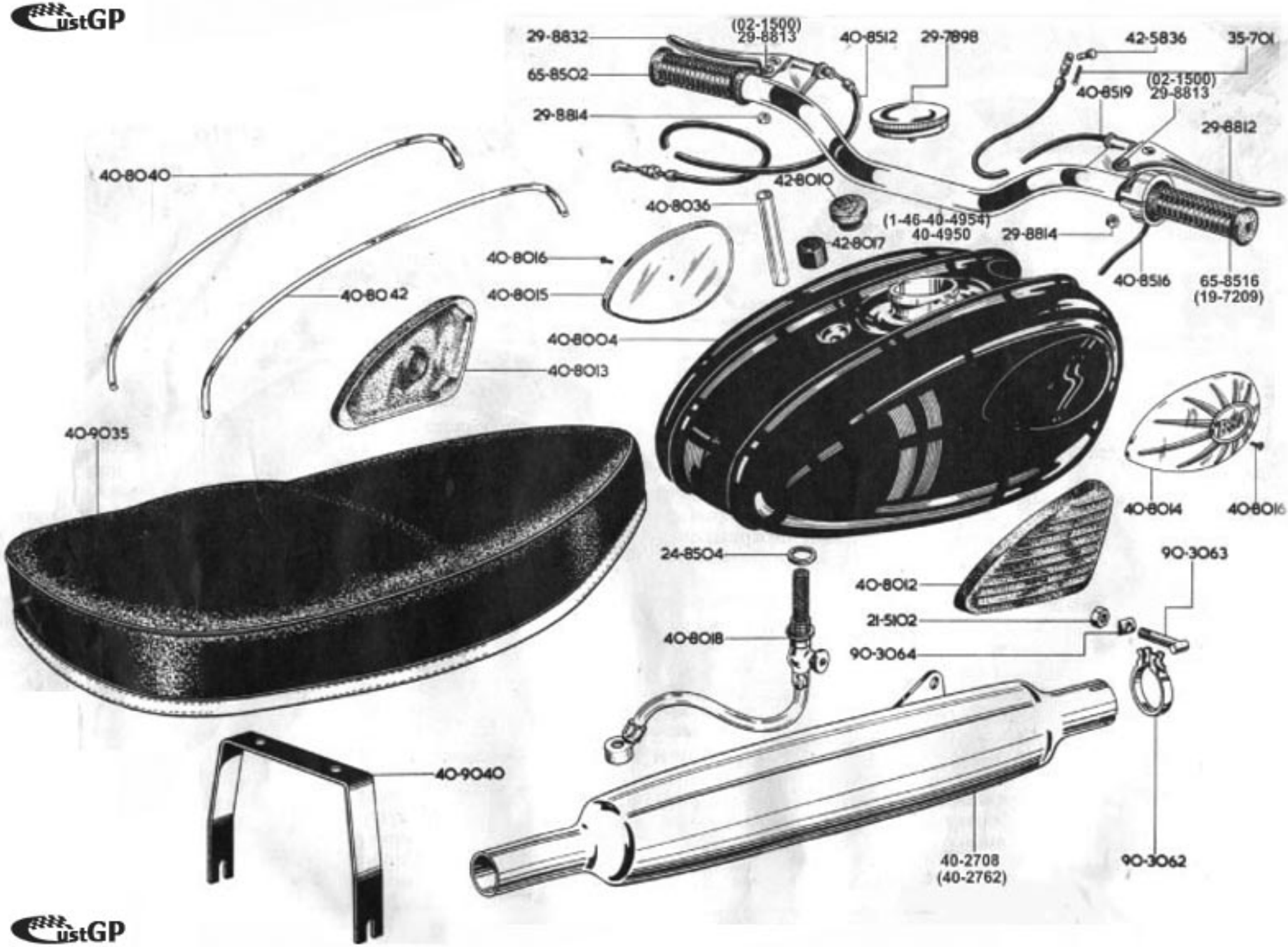

CustGP

(42-6887)
67-6885
67-6851
2-49
(2)
67-6839
(2)
24-8784
(2)
40-6751
15-7354
(2)
2-220
(2)
27-8560
(2)
2-1462
(2)
2-1462
(2)
2-220
(2)
(68-6524)
40-6506
40-6510
2-1462
(2)
2-2395
(2)
27-8560
(4)
2-204
(4)
2-2395
(4)
2-1462
(4)
24-563
(4)
40-6505
(2)
24-8784
(4)
2-2395
2-1462
(2)
27-8560
(2)
2-204
(2)
40-6508
(2)
24-8784
(2)
67-8313
(2)
2-204
2-525
2-1462
40-7701
2-2395
67-6760
2-522
40-7704
24-8784
24-7148
2-1462
2-204

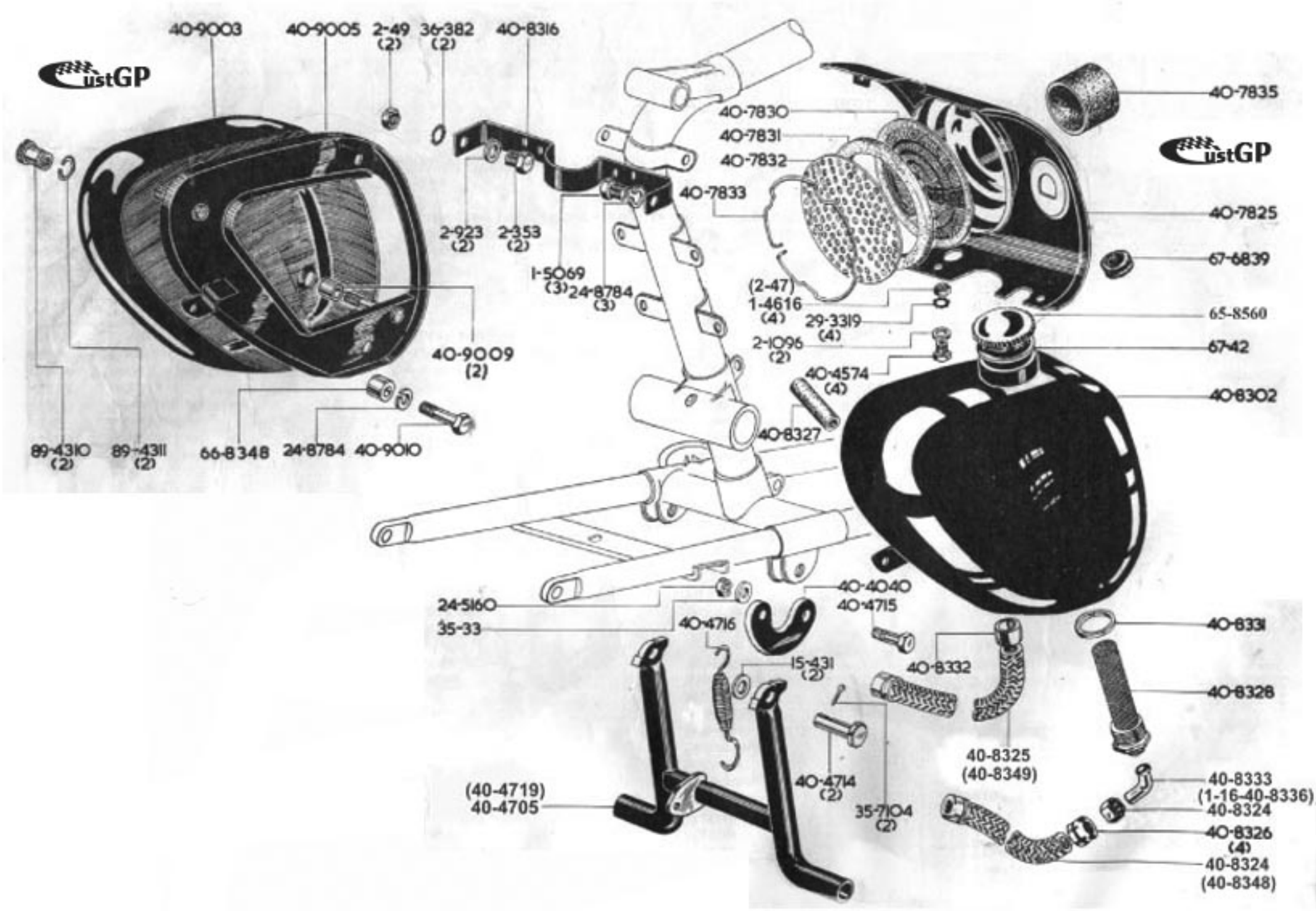
CustGP
40-9003
40-9005
2-49 (2)
36-382 (2)
40-8316
40-7835
40-7830
40-7831
40-7832
CustGP
40-7833
40-7825
2-923 (2)
2-353 (2)
67-6839
1-5069 (3)
24-8784 (3)
(2-47) 1-4616 (4)
29-3319 (4)
65-8560
2-1096 (2)
67-42
40-9009 (2)
40-4574 (4)
40-8302
40-8327
89-4310 (2)
89-4311 (2)
66-8348
24-8784
40-9010
24-5160
35-33
40-4040
40-4715
40-4716
40-8331
15-431 (2)
40-8332
40-8328
40-8325 (40-8349)
40-4714 (2)
(40-4719) 40-4705
35-7104 (2)
40-8333 (1-16-40-8336)
40-8324
40-8326 (4)
40-8324 (40-8348)